CUSTOMER SPECIFICATION DWG

NOTES:

1. DIMENSIONS IN BRACKETS [] ARE MILLIMETERS, FOR REFERENCE ONLY.
2. GRAIN DIRECTION PER ASME Y14.36M-1996FOR SS SATIN FINISHES ONLY.

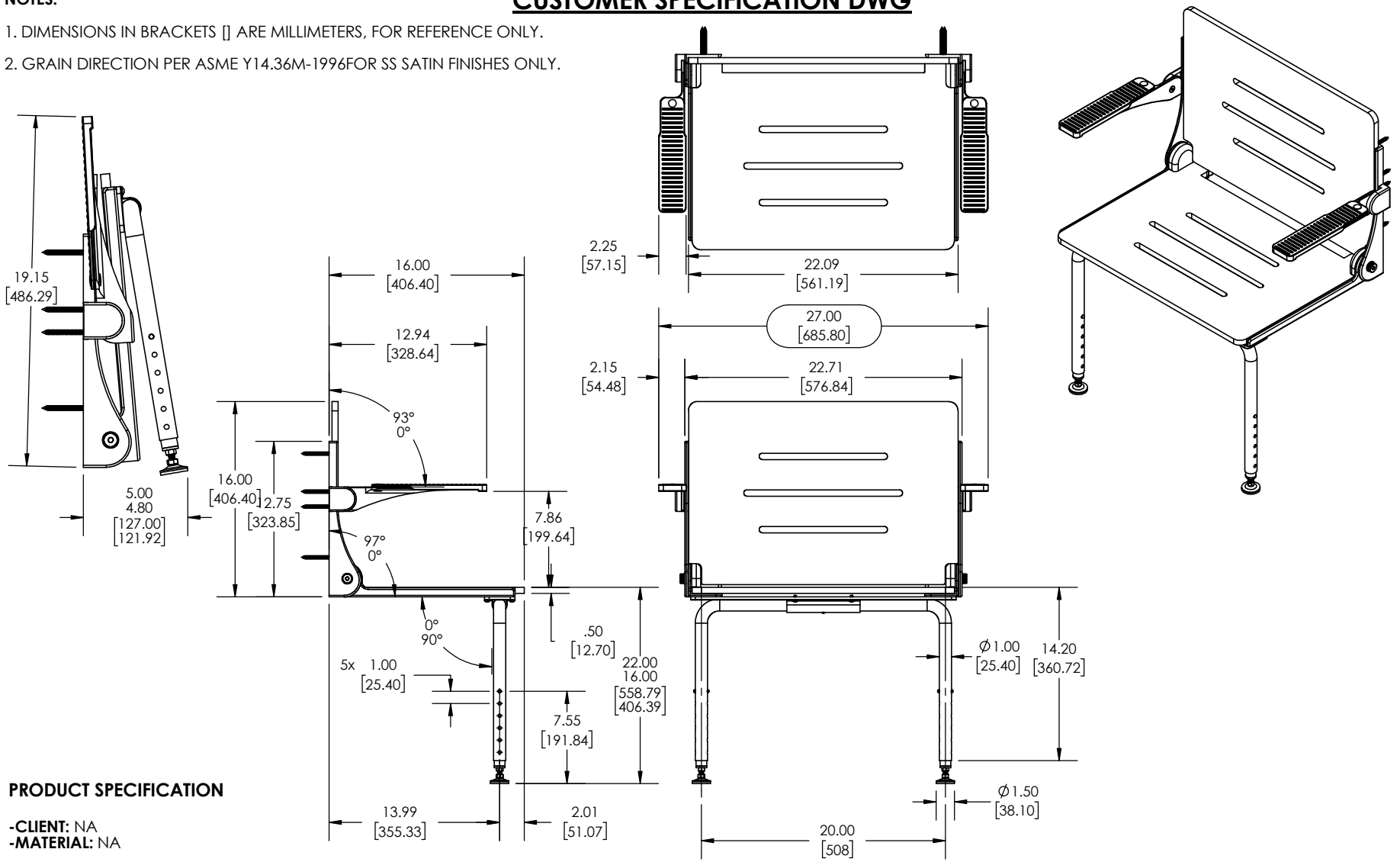

PRODUCT SPECIFICATION

-CLIENT: NA
-MATERIAL: NA

-AVAILABLE FINISHES

-POWDER COAT

1. ALMOND
2. WHITE
3. MATTE BLACK
4. SILVER
5. REFERENCE PRICE BOOK FOR ADDITIONAL OPTIONS

-HARDWARE PACKAGE INCLUDES:

1. #14 X 2.5 PHIL FLAT "A" 18-8 SS PN (S-4500-120456 QTY 8)

Proprietary & Confidential

This drawing and the information contained herein is the property of Seachrome Corporation and shall not be reproduced, copied, or disclosed in whole or in part, or used in manufacturing, or for any other purpose without the written permission of Seachrome Corporation.

INTERPRET GEOMETRIC TOLERANCING PER: ASME Y14.5-2009
UNLESS OTHERWISE SPECIFIED:
DIMENSIONS ARE IN INCHES [MM]
TOLERANCES: DECIMALS
FRACTIONAL ±1/64 .X ±0.1
ANGLES ± 1° .XX ±0.02

SEACHROME CORPORATION
1906 EAST DOMINGUEZ
LONG BEACH, CA 90810
(310) 427-8010

TITLE: SILHOUETTE COMFORT PLUS SHOWER SEAT

DRAWN	J. AMOZOC	8/13/19	DWG. NO. SHAFB-240155		REV B
ENG APPR.	J. AMOZOC	8/13/19	SIZE A	DO NOT SCALE DRAWING	SCALE: 1:12	SHEET 1