SEACHROME

Seachrome Corporation
1906 East Dominguez Street
Long Beach, California 90810
Phone: (800) 955-2476
Fax: (800) 444-3380

Description:

GSB-120120-QCR
12" x 12" Boomerang Bar
(Satin Stainless Finish)

Customer:

Customer Part #

10-27-2017

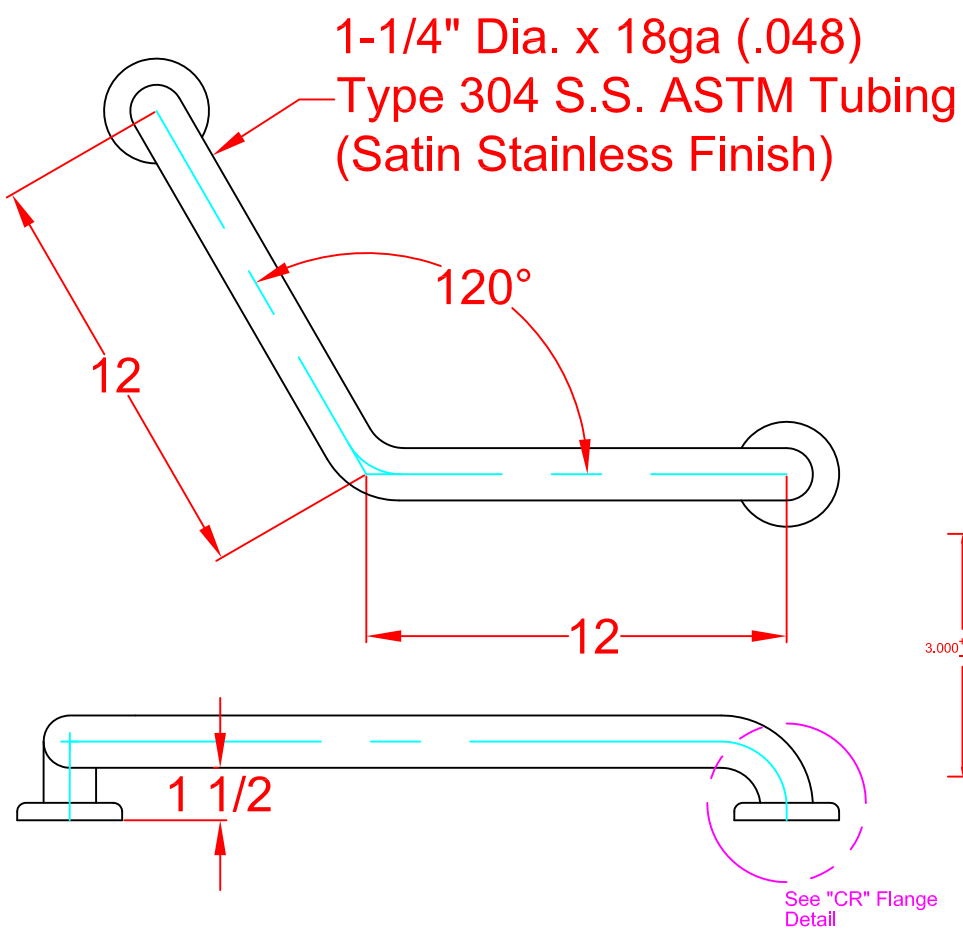

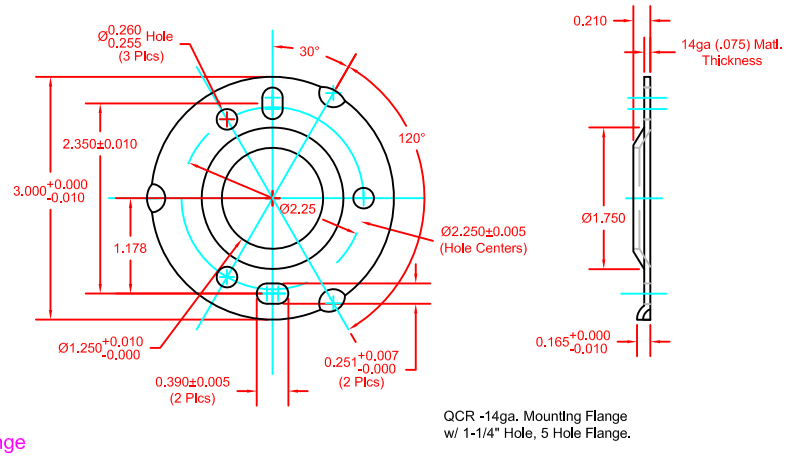

QCR -14ga. Mounting Flange
w/ 1-1/4" Hole, 5 Hole Flange.

This drawing and the information contained herein is proprietary to Seachrome Corp. and shall not be reproduced, copied or disclosed in whole, or part, or used for manufacturing or for any other purpose without the written permission of Seachrome Corporation.

Hardware Package Includes:
(6) #10 x 2-1/2" Phillips Pan Head Sheet Metal Screw