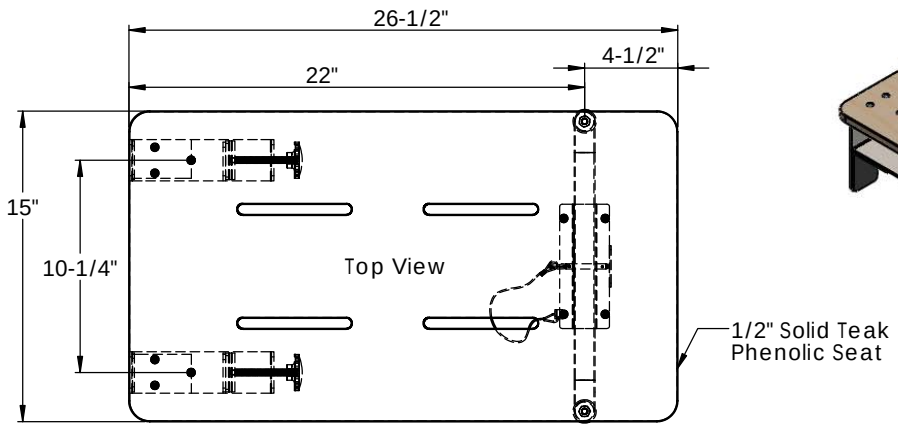

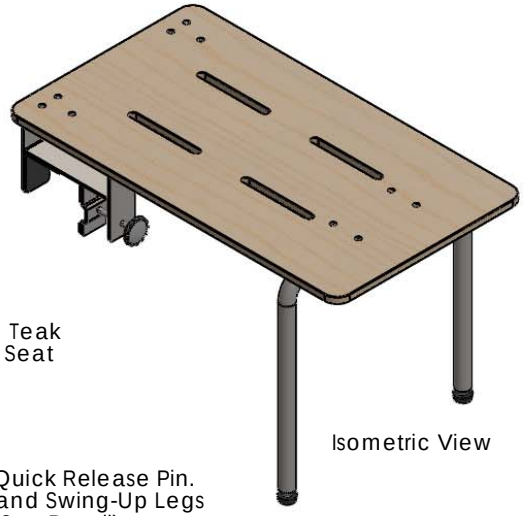

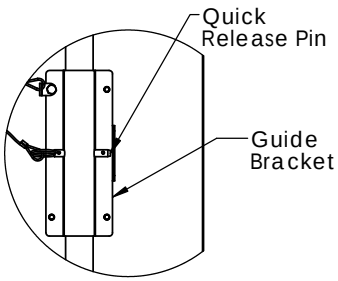

Swing Down Legs and Insert
The Quick Release Pin Thru The
Guide Bracket and Leg for use.

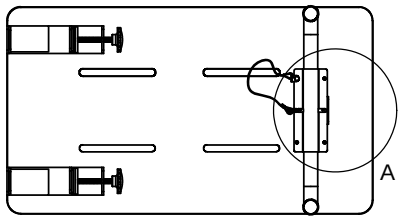

Bottom View

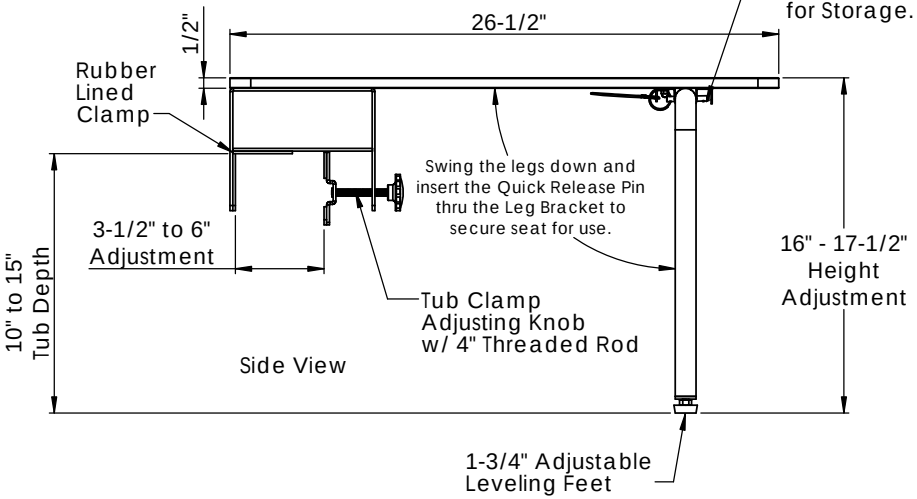

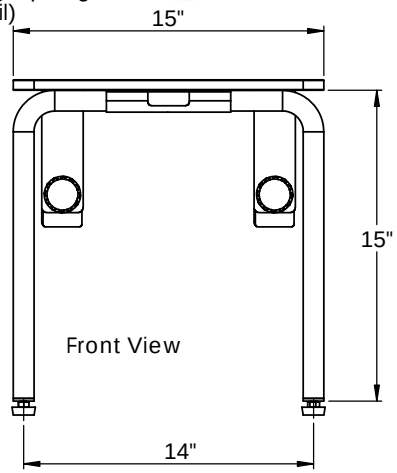

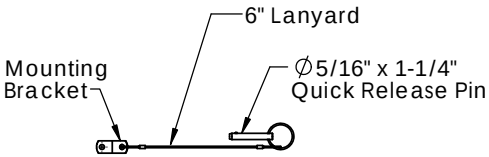

Stainless Quick-Release Pin
with Lanyard Detail

Material:
Seat: 1/2" Solid Teak Phenolic.

LEG: 1" Dia. x 18ga 304 Stainless Steel
with adjustable leg height (16" - 17-1/2" Height).

TUB CLAMP: Adjustable 3-1/2" to 6" 10ga
304 Stainless Steel, Rubber Lined.

PROPRIETARY AND CONFIDENTIAL

THE INFORMATION CONTAINED IN THIS DRAWING IS THE SOLE PROPERTY OF SEACHROME CORPORATION. ANY REPRODUCTION IN PART OR AS A WHOLE WITHOUT THE WRITTEN PERMISSION OF SEACHROME CORPORATION IS PROHIBITED.

NEXT ASSY	USED ON
APPLICATION	

UNLESS OTHERWISE SPECIFIED:

DIMENSIONS ARE IN INCHES
TOLERANCES:
FRACTIONAL ±
ANGULAR: MACH ± BEND ±
TWO PLACE DECIMAL ±
THREE PLACE DECIMAL ±

INTERPRET GEOMETRIC TOLERANCING PER:

MATERIAL
Teak Phenolic Seat

FINISH

DO NOT SCALE DRAWING

	NAME	DATE
DRAWN	Montoya	10-02-14
CHECKED		
ENG APPR.		
MFG APPR.		
Q.A.		

COMMENTS:

Seachrome Corporation

TITLE: Heavy Duty Portable Tub Seat 26-1/2" x 15" Adjustable Height of 16" x 17-1/2"

SIZE B

DWG. NO. SHPQ-265150-PTS

SCALE: 1:10 WEIGHT: SHEET 1 OF 3

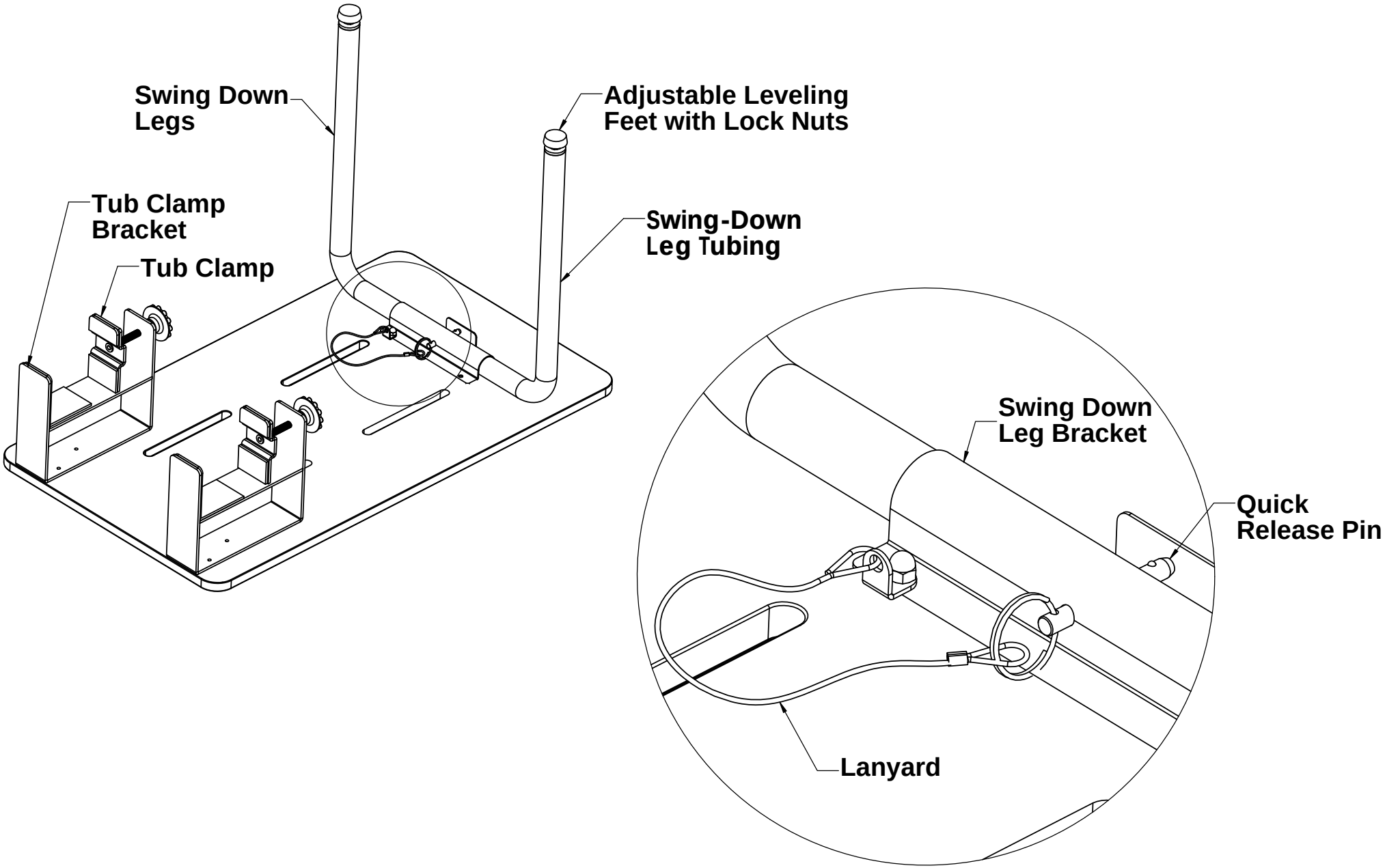
Swing Down Legs
Adjustable Leveling Feet with Lock Nuts
Tub Clamp Bracket
Tub Clamp
Swing-Down Leg Tubing
Swing Down Leg Bracket
Quick Release Pin
Lanyard

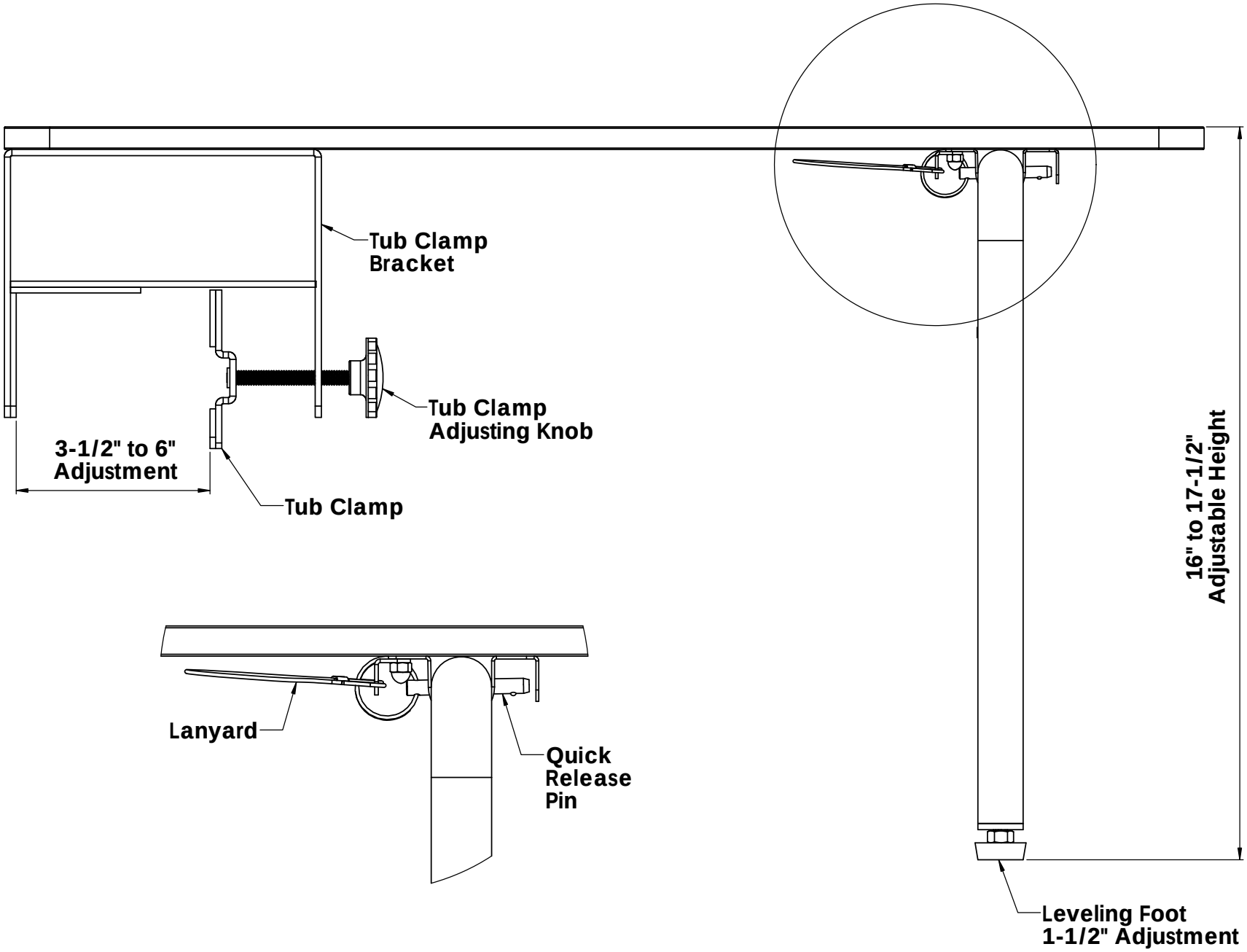
Tub Clamp
Bracket
Tub Clamp
Adjusting Knob
3-1/2" to 6"
Adjustment
Tub Clamp
16" to 17-1/2"
Adjustable Height
Lanyard
Quick
Release
Pin
Leveling Foot
1-1/2" Adjustment