SEACHROME

Seachrome Corporation
1906 East Dominguez Street
Long Beach, California 90810
Phone: (800) 955-2476
Fax: (800) 444-3380

Description:

SCAL-113
Dual Toilet Tissue
Dispenser with Utility Shelf

Customer:

Customer Part #

06-06-2014

This drawing and the information contained herein is proprietary to Seachrome Corp. and shall not be reproduced, copied or disclosed in whole, or part, or used for manufacturing or for any other purpose without the written permission of Seachrome Corporation.

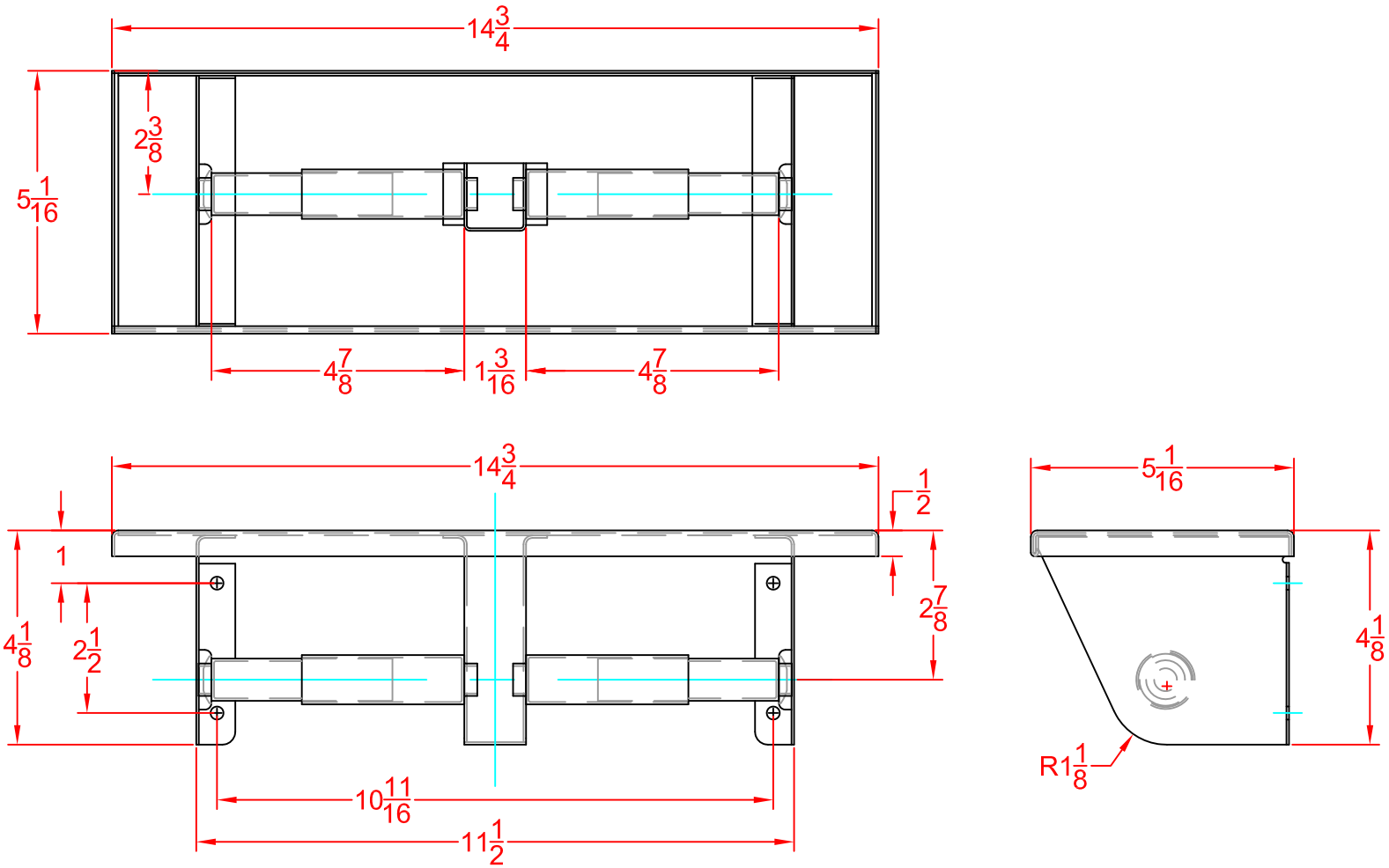

#304 Satin Stainless Steel x 18ga.
Overall: 14-3/4" Wide x 4-1/8" High x 5-1/16" Deep.
Capacity: 2 Standard 5-1/2" Diameter Toilet Tissue Rolls.

This information is subject to change without formal notice. If you need assistance, please contact Seachrome Corporation's technical support staff.