SEACHROME
SEACHROME CORPORATION
Phone: (800) 955-2476
Fax: (800) 444-3380
www.seachrome.com

Description:

CORONADO SERIES
DOOR BUMPER

Customer:

Customer Part #
701-13
06-21-2012

This drawing and the information contained herein is proprietary to Seachrome Corp. and shall not be reproduced, copied or disclosed in whole, or part, or used for manufacturing or for any other purpose without the written permission of Seachrome Corporation.
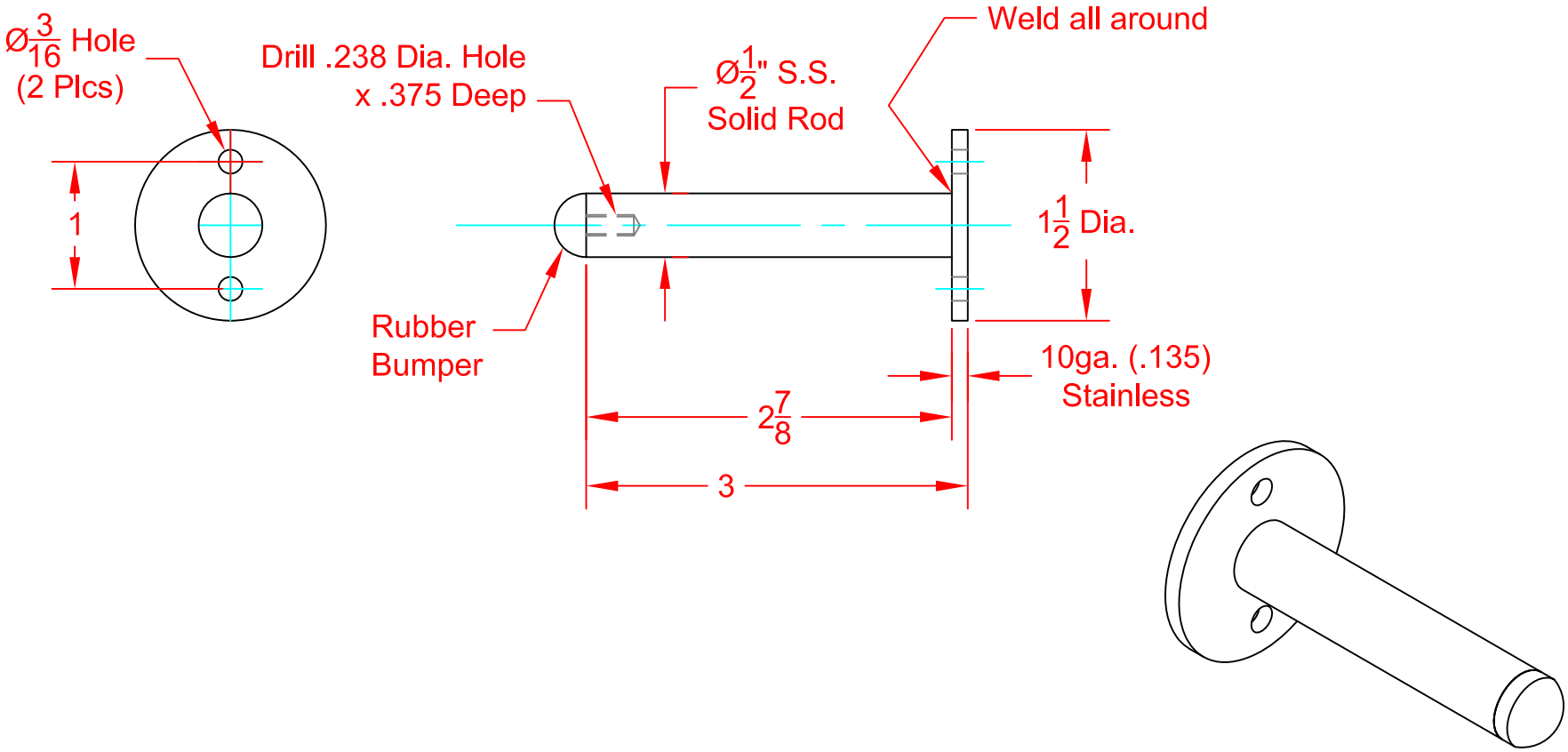
MATERIALS
Mounting Flange: 1-1/2" Dia. x 10ga. Stainless Steel
Shaft: 1/2" Round Solid Stainless Steel
Rubber Bumper